2720 Tobey Drive, Indianapolis, IN 46219
Tel 1-877-671-7011 ▪ Fax 800-851-0000
Zero.Customer.Support@allegion.com
www.zerointernational.com

Part No:	Part description:
41	Meeting stile

Notes:	Provided by:	
Customer name:	Job no:	Date:

Image may not be shown to scale

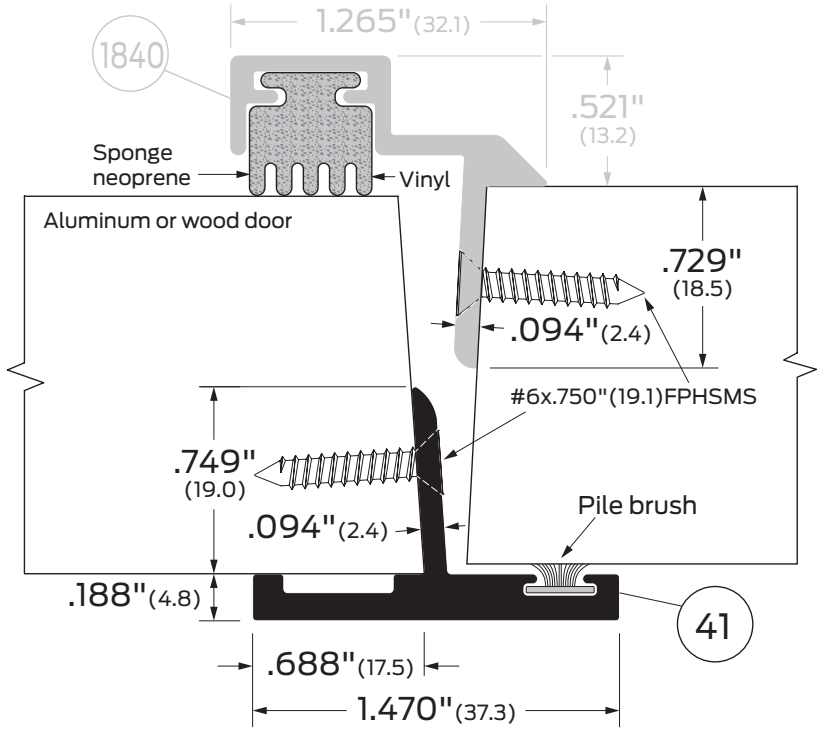

Notes:
Order components separately.

Certifications:
Fire rated-UL10c

ANSI/BHMA:
41AA, 41BK, 41D, 41G R3F636

BHMA CERTIFIED

Finishes:

AA	Aluminum clear anodized
BK	Aluminum black anodized
D	Aluminum dark bronze anodized
G	Aluminum gold anodized

© 2018 Allegion • 012788, Rev. 1/19 • **www.allegion.com/us**