INSTALLATION DIRECTIONS

BEFORE APPLYING THIS DEVICE

A. Threshold (if any) must be installed.
B. Doors must be fitted and hung.
C. Check that handing of hardware corresponds with handing of door.

1. APPLY STRIKE

A. Tape appropriate strike template to stop.
B. When Von Duprin Mullion is used apply strike at tapped holes in Mullion. (See illustration **1 or 2**)
C. Vertical rod and rim devices on pairs of doors require 1609J strike. See template No. 30021 for this application.

2. PREPARE DOOR

A. Tape full size template No. 1 or 2, depending on handing of door, to inside face of lock stile. See Device Height Schedule.

NOTE: BE SURE CENTERLINE OF LOCK STILE CASE IS PARALLEL TO STOP AND THAT EDGE OF CASE IS 3/16 FROM EDGE OF STRIKE. STRIKE MUST BE SHIMMED OUT IF LOCK CASE IS MOUNTED MORE THAN 3/16 FROM STRIKE.

B. Prepare door as shown. See Fig. 1 for wood door application, and Fig. 2 for metal door application.

3. APPLY OUTSIDE TRIM

A. See directions in trim carton. Line "X-X" on trim template corresponds to line "X-X" on device template and is parallel to edge of door. Transfer line "X-X" from inside face to outside face of door.
B. Prepare outside face of lock stile.
C. Cut off thumbpiece and cylinder tailpiece, if necessary, to extend 5/8 to 3/4 thru door and into device case.
D. Apply outside trim.

4. INSTALL LEVER ARMS

A. Insert lever arms into lock stile and hinge stile cases.
B. Assemble axles and tighten securely. (See instructions in axle envelope.)

5. APPLY LOCK STILE CASE

A. Remove key from cylinder.
B. Position cylinder cam as shown in Fig. 3.
C. Attach lock stile case to door. (See Fig. 1 or Fig. 2)
D. Test key and thumbpiece action.

6. APPLY HINGE STILE CASE AND CROSSBAR TUBE (FIG. 4)

A. Dog lever arms in depressed position.
B. Slip crossbar tube on lock stile and hinge stile lever arms. **(See Direction No. 941009 for cutting crossbar, if necessary.)**
C. Be sure crossbar is level and hinge stile case is parallel to edge of door and approximately on centerline of exposed stile.
D. Using holes in hinge stile case, mark location and prepare door for attaching screws.
E. Apply hinge stile case with crossbar in place.
F. Tighten wedge-tite set screws securely with dog key and screwdriver or equivalent for leverage, and test crossbar for free action. **(See Direction No. 941009 for these instructions.)**

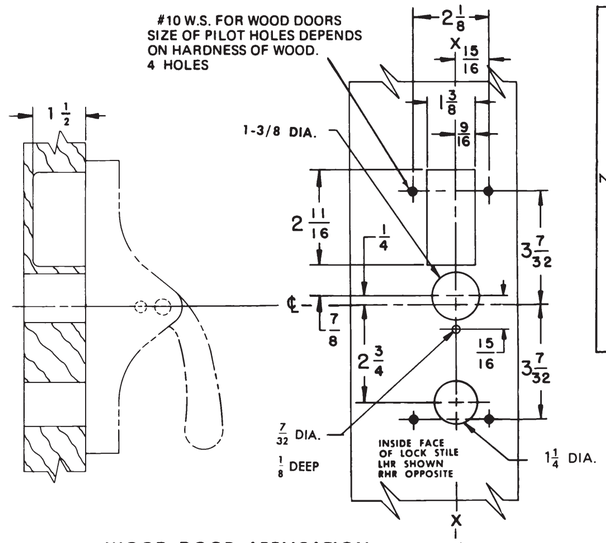

WOOD DOOR APPLICATION
FIG. 1

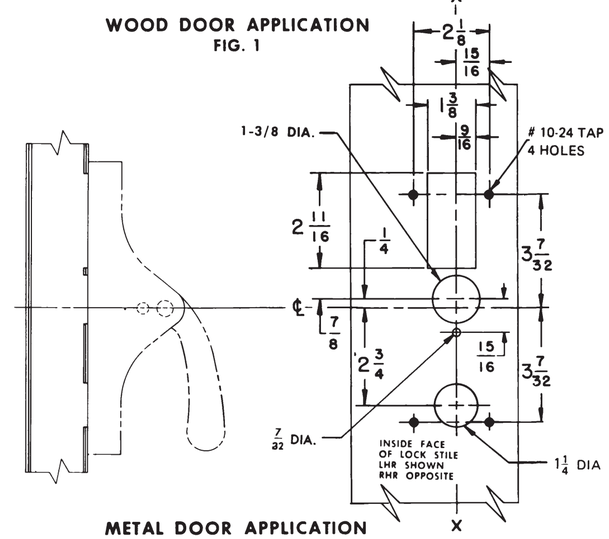

METAL DOOR APPLICATION
FIG. 2

WIRING DIAGRAM

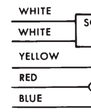

NOTES:
1. ELECTRICAL INSTALLATION SHALL COMPLY WITH PROVISIONS OF NATIONAL ELECTRIC CODE CLASS TWO INSTALLATIONS.
2. POWER IS TO BE TRANSMITTED INTO DOOR AND TO DEVICE THRU AN UNDERWRITERS LABORATORIES APPROVED ENERGY TRANSFER DEVICE.

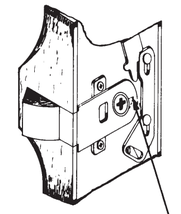

Tip of cylinder cam to be in this position. Be sure key is removed from cylinder.

FIG. 3

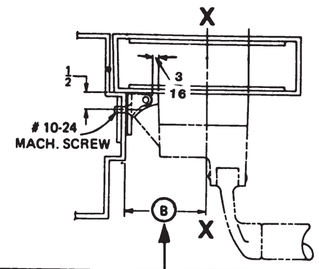

SINGLE DOOR INSTALLATION		
STRIKE	DIMENSION (B)	MIN. STILE
299/299F (Shown)	2-1/2	4-3/8
264	2-1/4	4-1/8
1606	2-1/16	3-15/16

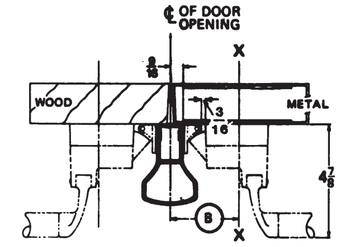

DOUBLE DOOR INSTALLATION WITH VON DUPRIN MULLIONS		
MULLION & STRIKE	DIMENSION (B)	MIN. STILE
5254/5654 x 299/299F (Shown)	3-1/16	4-1/4
5254 or 5654 x 264	2-13/16	4"

ILLUST. 1

NOTE: FOR WOOD DOOR, ROUTING SHOULD BE 9/16 MIN. WIDTH & DEPTH FOR 1/2 DIA. CABLE. SEE DIRECTIONS IN POWER TRANSFER CARTON FOR ROUTING DIMENSIONS FOR UNIT.

911183-00

SINGLE DOOR OPENING 39-13/16 TO FINISHED FLOOR

DOUBLE DOOR OPENING WITH VON DUPRIN MULLION AND THRESHOLD	
THRESHOLD NO.	TO FIN. FLOOR
THRESHOLDS	39-11/16
NO THRESHOLD (FLAT SILL)	39-11/16

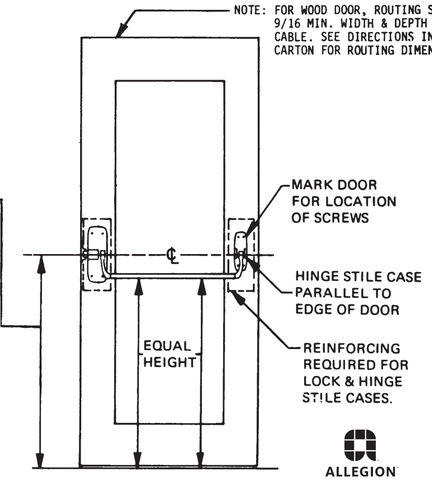

FIG. 4

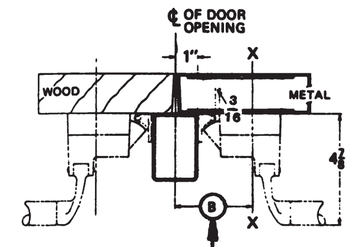

DOUBLE DOOR INSTALLATION WITH VON DUPRIN MULLIONS		
MULLION & STRIKE	DIMENSION (B)	MIN. STILE
4954 x 299/299F (Shown)	3-1/2	4-11/16
4654 x 264	3-1/4	4-7/16
1654 x 1606	3-1/16	4-1/4

ILLUST. 2

Customer Service
1-877-671-7011 www.allegion.com/us

FOR TRIM APPLICATION SEE DIRECTIONS IN TRIM CARTON

DESCRIPTION	VON DUPRIN	
E-88TP & E-88TP (F.S.) SERIES ELECTRIC LOCKING RIM DEVICES.	DIRECTION NUMBER 911183-00(b)	DATE Rev. 06/14

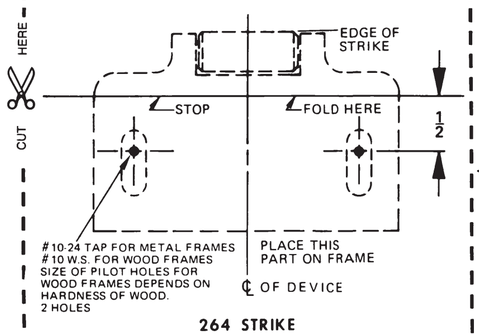

264 STRIKE
TEMPLATE NO. 3

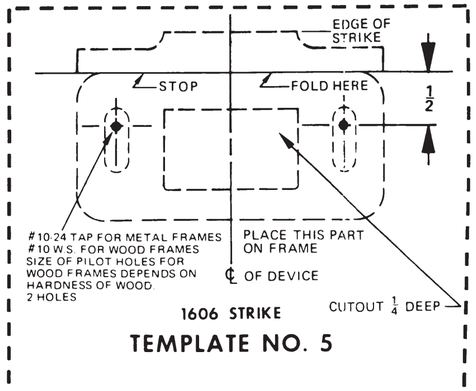

1606 STRIKE
TEMPLATE NO. 5

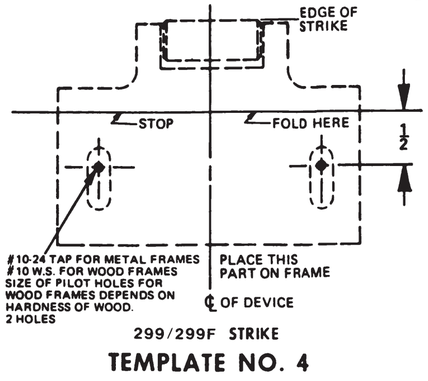
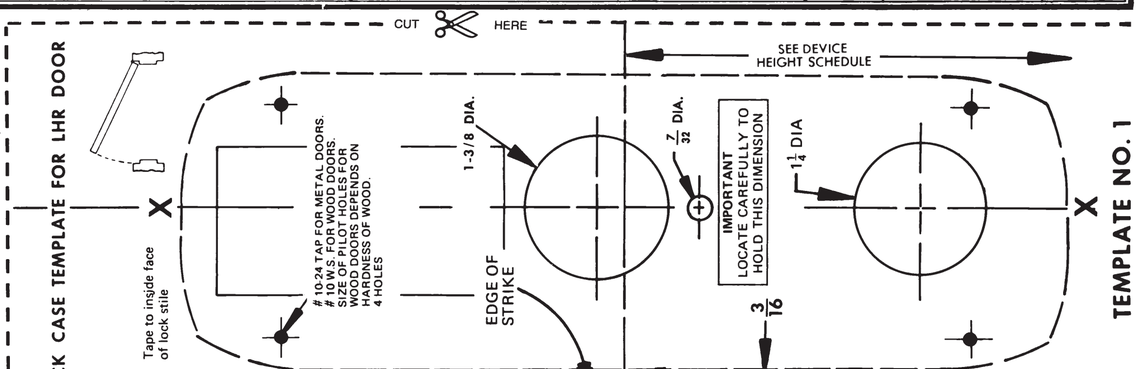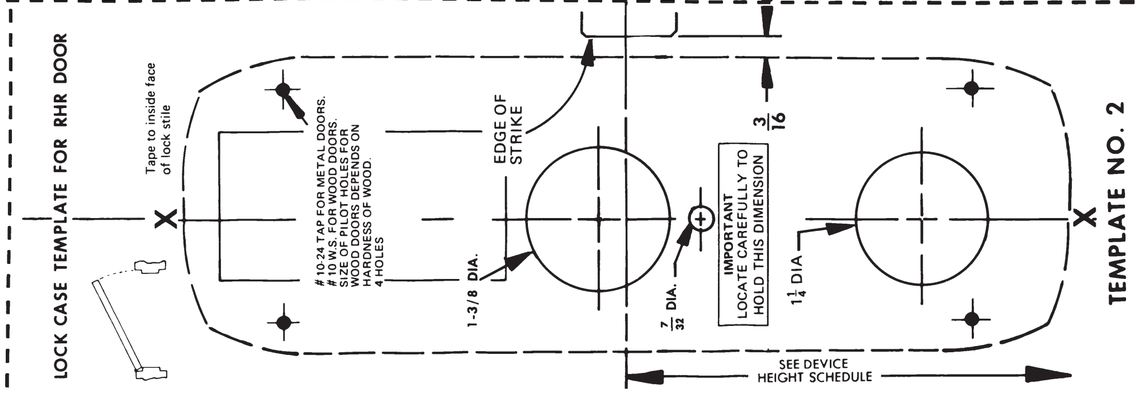
299/299F STRIKE
TEMPLATE NO. 4