VON DUPRIN

INSTALLATION DIRECTIONS

BEFORE APPLYING THIS DEVICE

A. Threshold (if any) must be installed.
B. Doors must be fitted and hung.
C. Check that handing of hardware corresponds with handing of door. See Fig. 3.

1. APPLY STRIKE

A. Tape appropriate strike template No. 3 or No. 4 depending on handing of door to stop.
B. When Von Duprin Mullion is used apply strike at tapped holes in Mullion. (See illustration 1.)

2. PREPARE DOOR

A. Tape full size template No. 1 or 2, depending on handing of door, to inside face of lock stile. Be sure center line of device is 39-13/16" from finished floor.

NOTE: BE SURE CENTERLINE OF LOCK STILE CASE IS PARALLEL TO STOP AND THAT EDGE OF CASE IS 3/16 FROM EDGE OF STRIKE. STRIKE MUST BE SHIMMED OUT IF LOCK CASE IS MOUNTED MORE THAN 3/16 FROM STRIKE.

B. Prepare door as shown. See Fig. 1 for wood door application, and Fig. 2 for metal door application.

3. APPLY OUTSIDE TRIM

A. See directions in trim carton. Line "X-X" on trim template corresponds to line "X-X" on device template and is parallel to edge of door. Transfer line "X-X" from inside face to outside face of door.
B. Prepare outside face of lock stile.
C. If necessary, cut off knob spindle to extend 1/4" to 1/2" and cylinder tailpiece to extend 5/8" to 3/4" thru door and into device case.
D. Apply outside trim.

4. INSTALL LEVER ARMS

A. Insert lever arms into lock stile and hinge stile cases.
B. Assemble axles and tighten securely. (See instructions in axle envelope.)

5. APPLY LOCK STILE CASE

A. Remove key from cylinder.
B. Position cylinder cam as shown in Fig. 3.
C. Attach lock stile case to door. (See Fig. 1 or Fig. 2)
D. Test key and knob action.

6. APPLY HINGE STILE CASE AND CROSSBAR TUBE (FIG. 4)

A. Slip crossbar tube on lock stile and hinge stile lever arms. (See Direction No. 941009 for cutting crossbar, if necessary.)
B. Be sure crossbar is level and hinge stile case is parallel to edge of door and approximately on centerline of exposed stile.
C. Using holes in hinge stile case, mark location and prepare door for attaching screws.
D. Apply hinge stile case with crossbar in place.
E. Tighten wedge-tite set screws securely with dog key and screwdriver or equivalent for leverage, and test crossbar for free action. (See Direction No. 941009 for these instructions.)

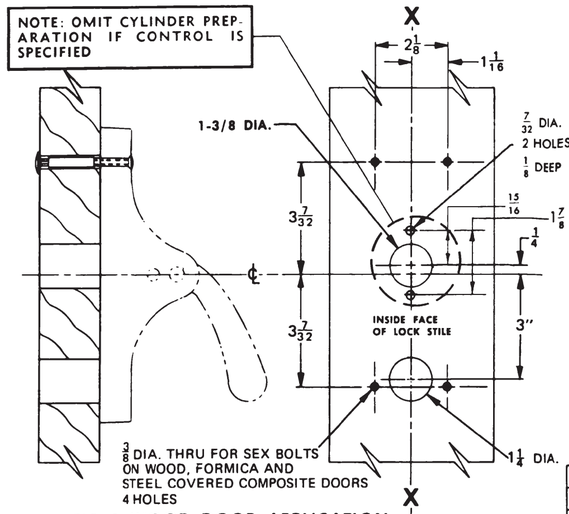

FIG. 1 WOOD DOOR APPLICATION

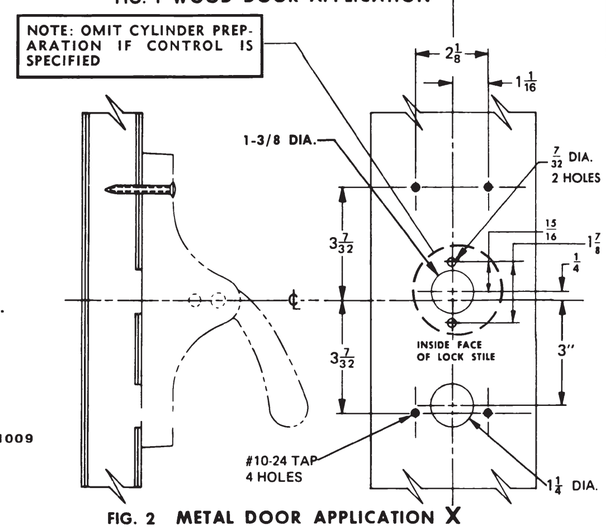

FIG. 2 METAL DOOR APPLICATION

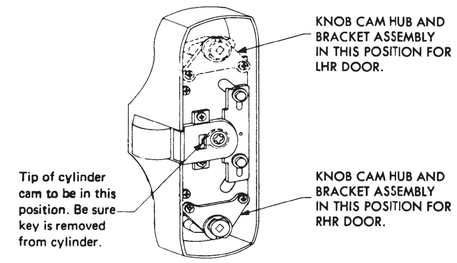

FIG. 3

SINGLE DOOR INSTALLATION		
STRIKE	DIMENSION "B"	MIN. STILE
268	2-3/8	4-3/8
DOUBLE DOOR INSTALLATION WITH VON DUPRIN MULLIONS		
MULLION & STRIKE	DIMENSION "B"	MIN. STILE
8854 x 268	3-3/8	4-11/16

SINGLE DOOR OPENING 39-13/16 TO FINISHED FLOOR	
DOUBLE DOOR OPENING WITH VON DUPRIN MULLION AND THRESHOLD	
THRESHOLD NO.	TO FIN. FLOOR
350 or 360	$39\frac{13}{16}$
355 or 365	
390	
ALL OTHER THRESHOLDS	
NO THRESHOLD (FLAT SILL)	

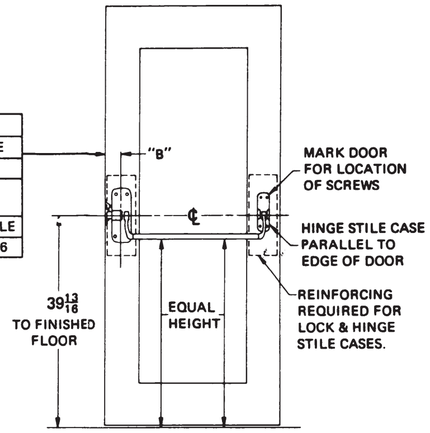

FIG. 4

FOR TRIM APPLICATION SEE DIRECTIONS IN TRIM CARTON

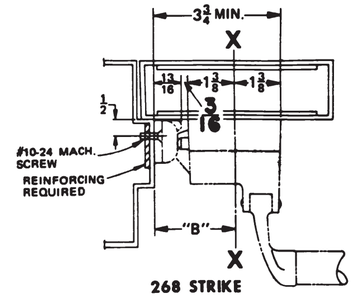

268 STRIKE
SINGLE DOOR

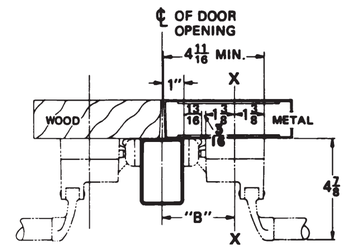

ILLUST. 1
9954 MULLION WITH 268 STRIKE

911172-00

ALLEGION

Customer Service
1-877-671-7011 www.allegion.com/us

DESCRIPTION	VON DUPRIN	
88K-F SERIES RIM DEVICE	DIRECTION NUMBER 911172-00(b)	DATE Rev. 01/14

CUT HERE

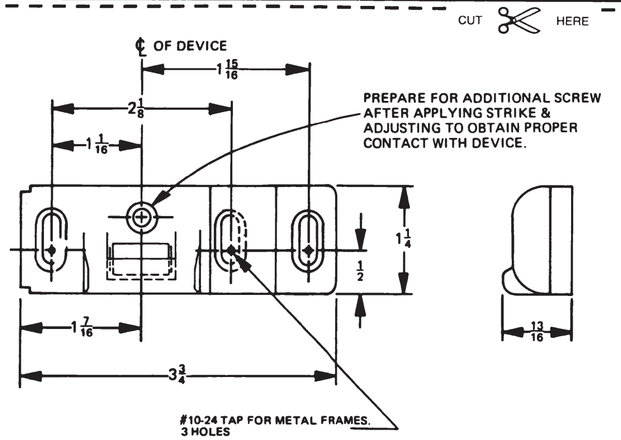

268 STRIKE

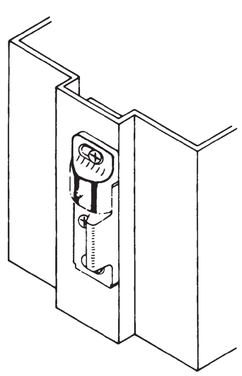

LHR SHOWN
RHR OPPOSITE

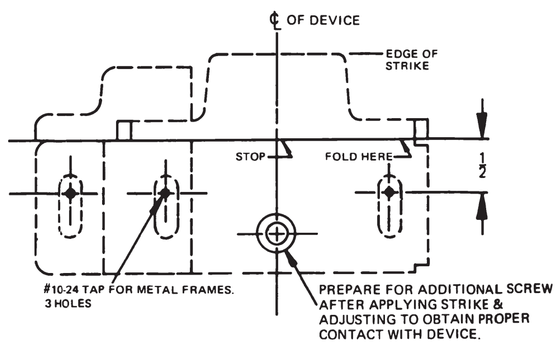

268 STRIKE
TEMPLATE NO. 3

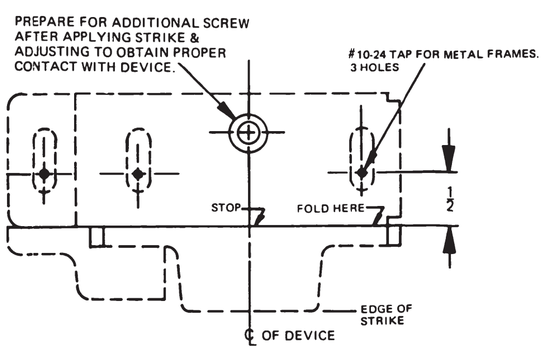

268 STRIKE
TEMPLATE NO. 4
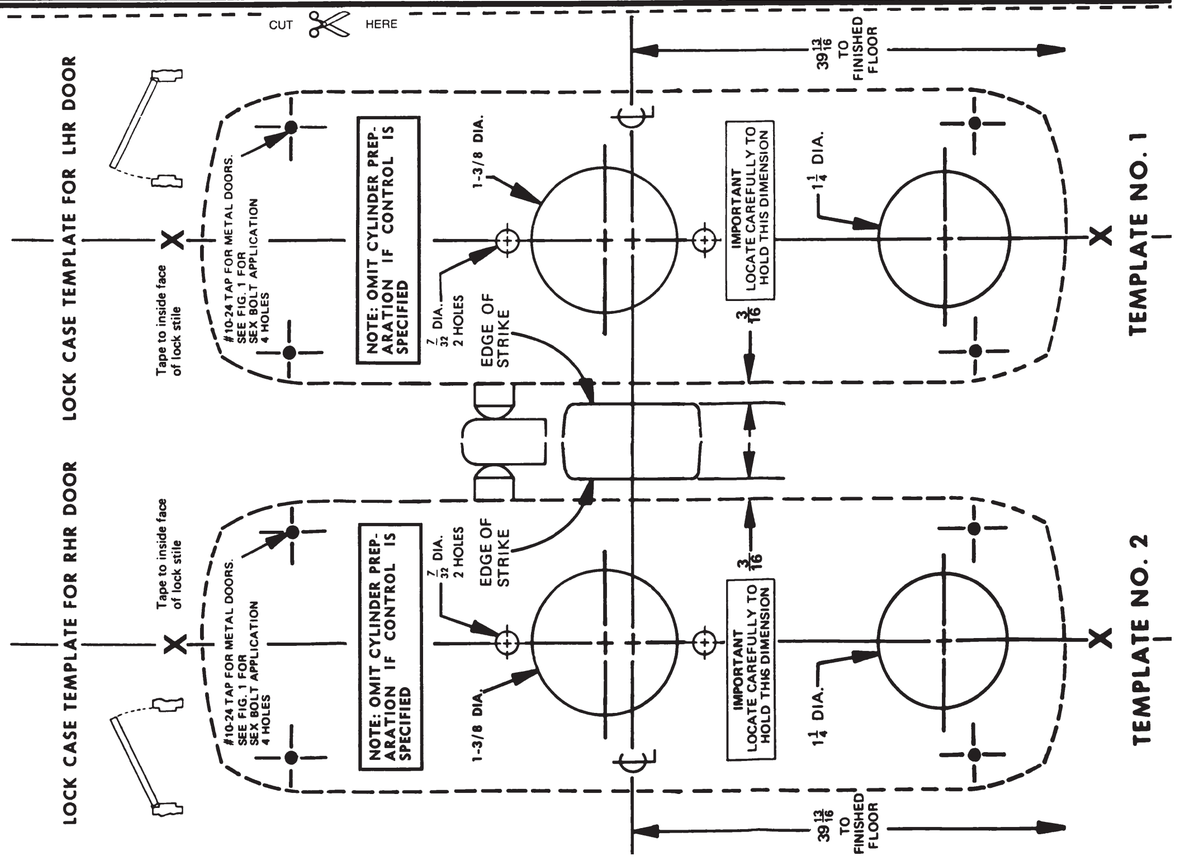
CUT HERE